PB12/13/14 F3C - Male tip - male thread BSPT

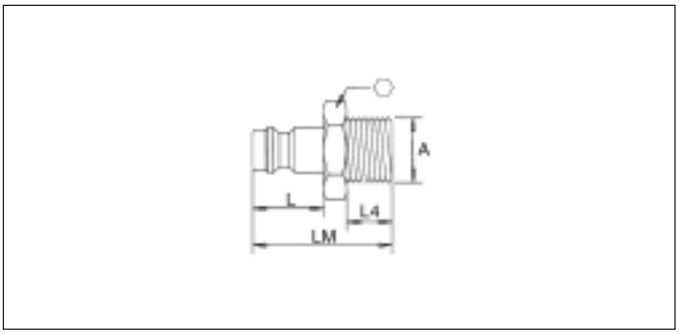

Body size	A	Part number	⬡	L	LM	L4
1/4	1/8	**PB12 F3C1**	13	23.6	39	9
1/4	1/4	**PB12 F3C2**	14	23.6	42	12
1/4	3/8	**PB12 F3C3**	17	23.6	42	12
3/8	1/4	**PB13 F3C2**	17	26.2	42	9
3/8	3/8	**PB13 F3C3**	19	26.2	42	9
3/8	1/2	**PB13 F3C4**	24	26.2	46	12
1/2	1/2	**PB14 F3C4**	22	34.9	59	17
1/2	3/4	**PB14 F3C6**	27	34.9	62	19

PB12/13/14 G4Z - Male tip - female thread BSPP

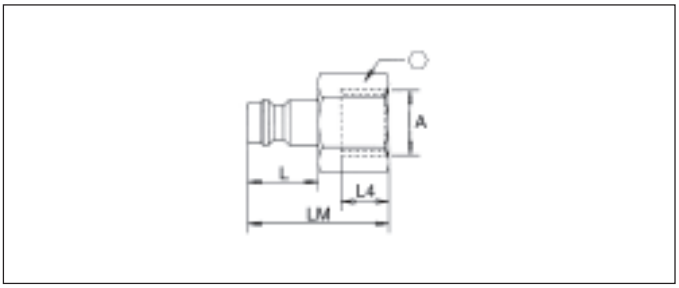

Body size	A	Part number	⬡	L	LM	L4
1/4	1/4	**PB12 G4Z2**	17	23.6	36	9.0
1/4	3/8	**PB12 G4Z3**	19	23.6	36	9.0
3/8	3/8	**PB13 G4Z3**	19	26.2	42	10.0
3/8	1/2	**PB13 G4Z4**	24	26.2	43	12.0
1/2	1/2	**PB14 G4Z4**	24	34.9	61	23.0
1/2	3/4	**PB14 G4Z6**	32	34.9	62	24.0

PB12/13/14 EB - Male tip - hose barb

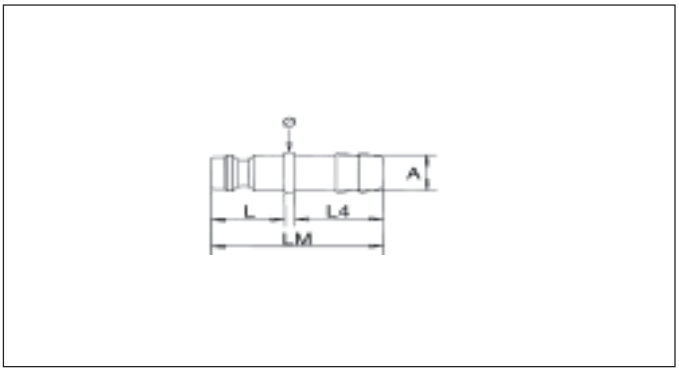

Body size	A mm	Part number	d1	L	LM	L4
1/4	6	**PB12 EB6**	14	23.6	51	25
1/4	8	**PB12 EB8**	14	23.6	51	25
1/4	10	**PB12 EB10**	14	23.6	51	25
3/8	6	**PB13 EB6**	16	26.2	55	25
3/8	8	**PB13 EB8**	16	26.2	55	25
3/8	10	**PB13 EB10**	16	26.2	55	25
1/2	10	**PB14 EB10**	17	34.9	62	25
1/2	13	**PB14 EB13**	17	34.9	62	25
1/2	19	**PB14 EB19**	21	34.9	72	35

PB12/13/14 PL - Male tip - Push-Lok

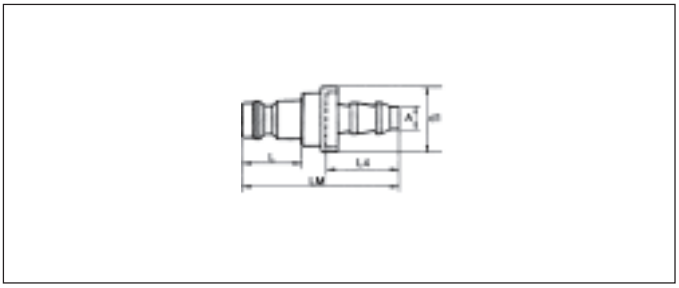

Body size	A	Part number	d1	L	LM	L4
1/4	1/4	**PB12 PL4**	18.0	23.6	45.5	20.4
1/4	3/8	**PB12 PL6**	22.0	23.6	49.3	24.2
3/8	1/4	**PB13 PL4**	18.0	26.2	48.4	20.4
3/8	3/8	**PB13 PL6**	22.0	26.2	52.2	24.2
1/2	1/2	**PB14 PL8**	24.5	34.9	64.9	27.9
1/2	3/4	**PB14 PL12**	32.0	34.9	75.1	38.1

For more information, please consult our catalogue 3800-GB-F.